Design for low temperature applications
Single compressor or parallel system
Simple structure, easy to install
Dedicated to R404A, R507 and R22

High-efficiency Low Temperature Model LB-PLUS Series Screw Compressor

Highlights of LB-PLUS Screw Compressor

High-efficiency Screw Rotor Profile

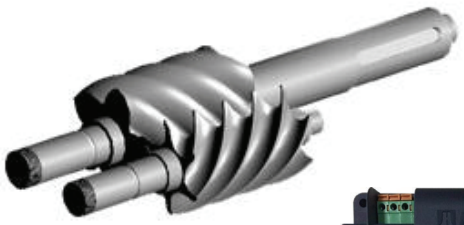

- Advanced 5-to-6 rotor profile, ultra low inner leakage
- Hyper volumetric efficiency and high displacement
- Designed for refrigeration applications such as cold storage, tunnel frezzer, ice machine and IQF

High-efficiency Motor

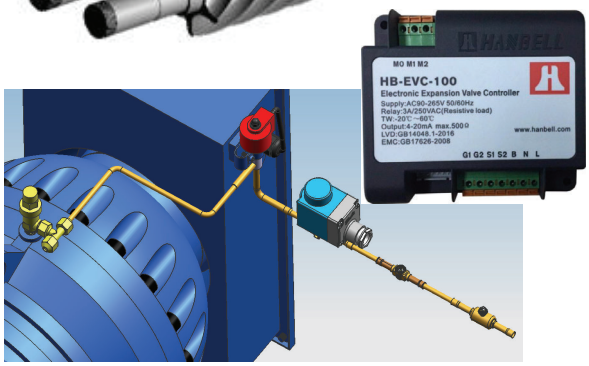

- Low starting current and starting time
- Isolated motor cooling circuit, no loss on gas superheat
- Durable and heavy duty motor design
- Built-in electronic expansion valve for motor cooling
- Built-in motor temp. controller module
- VFD motor or motor of special voltage available

High-performance Oil Separator

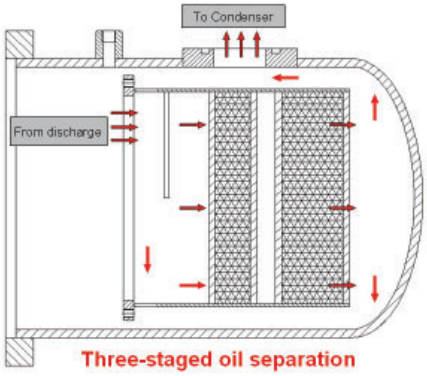

- Three-stage oil separation
- Low pressure drop and oil carry-over
- Replaceable demister
- Without internal demister oil separator (P-type) avaiable

Other Features and Accessories

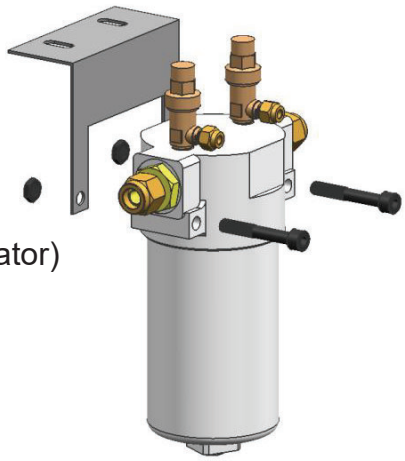

- Easy access terminal box for wiring and service
- Suction port far from termianl box to avoid condensation
- Built-in motor temperature sensor PT-100
- PTC Discharge temp. thermistor
- PTC or NTC motor temp. thermistor
- Sight glasses for refrigerant and oil condition check
- Oil cooler applicable
- Suction filter and control valve
- Oil pressure differential switch
- External oil filter, oil line solenoid valve, oil flow switch (P-type oil separator)
- INT69HBY protection module
- Frequency conversion controller (optional)

Compressor Nomenclature

LB - XXX - X - X - PLUS

- X (last): Null: With internal oil separator; P: Without internal oil separator (parallel systems)
- X: Motor Code: Null=Standard motor; V=VFD motor
- XXX: Displacement at 50 Hz (m^3/hr)
- LB: Low Temperature model

Technical Data

MODEL	COMPRESSOR		MOTOR							Lubricant Charge	Weight
	Displacement 60 / 50Hz	Rated Speed 60 / 50Hz	Type	Nominal hp		Starting	Voltage (V)		Protection		
	m^3/hr			60Hz	50Hz		60Hz	50Hz		L	kg
LB-100/ LB-100-P	127/106	3550/2950	3 Phase, 2 Pole, Squirrel Cage, Induction Motor	36	30	PWS DOL	380 440 460 480 575	380 400 415	PTC, NTC, PT100	4.5	248/233
LB-140/ LB-140-P	167/139			48	40					7	290/275
LB-180/ LB-180-P	215/179			60	50					7.5	310/295
LB-200/ LB-200-P	238/198			72	60					10	440/420
LB-230/ LB-230-P	269/224			84	70					10	460/440
LB-250/ LB-250-P	308/257			96	80					10.5	464/446
LB-280/ LB-280-P	330/275			108	90					11	474/454
LB-360-P	439/366			132	110					-	370
LB-410-P	499/416			150	125					-	416

Compressor Dimension

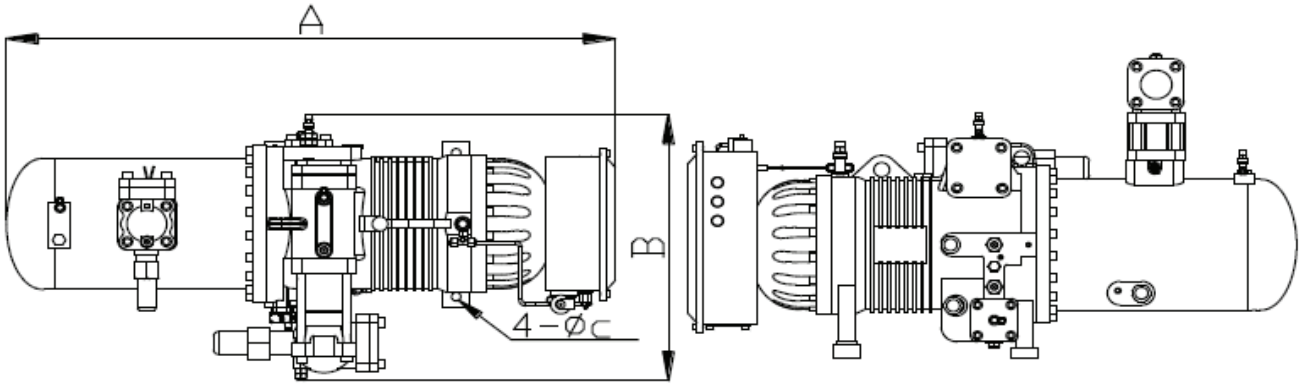

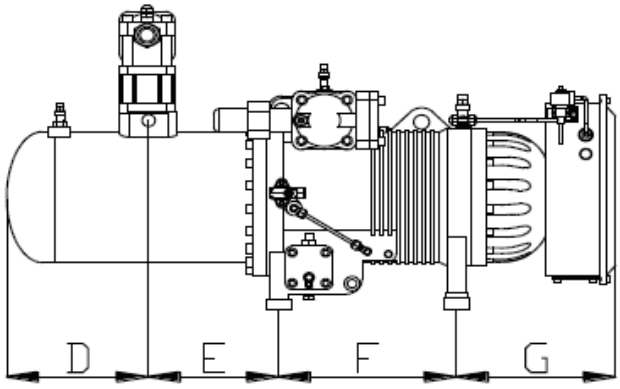

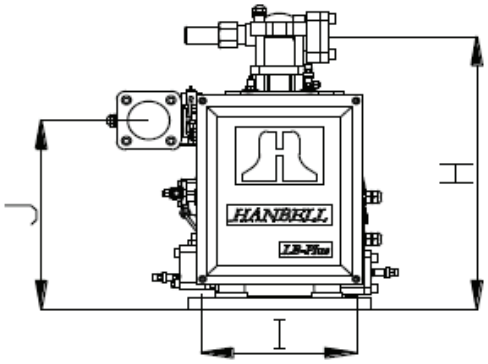

Model	A	B	C	D	E	F	G	H	I	J
LB-100	1163.5	554	18	(275)	247.5	338	303	569	300	395
LB-140	1199	584	18	(297)	255.5	339	308	578	350	402.5
LB-180	1263	584	18	(297)	255.5	405	308	578	350	402.5
LB-200	1410	645	18	(427)	270.3	390	332	683	350	449.5
LB-230 ~ LB-280	1445	649	18	(427)	265.3	411	340	683	386	483

*Dimension of LB-xxx-P, please refer to technical manual.

Application Limits

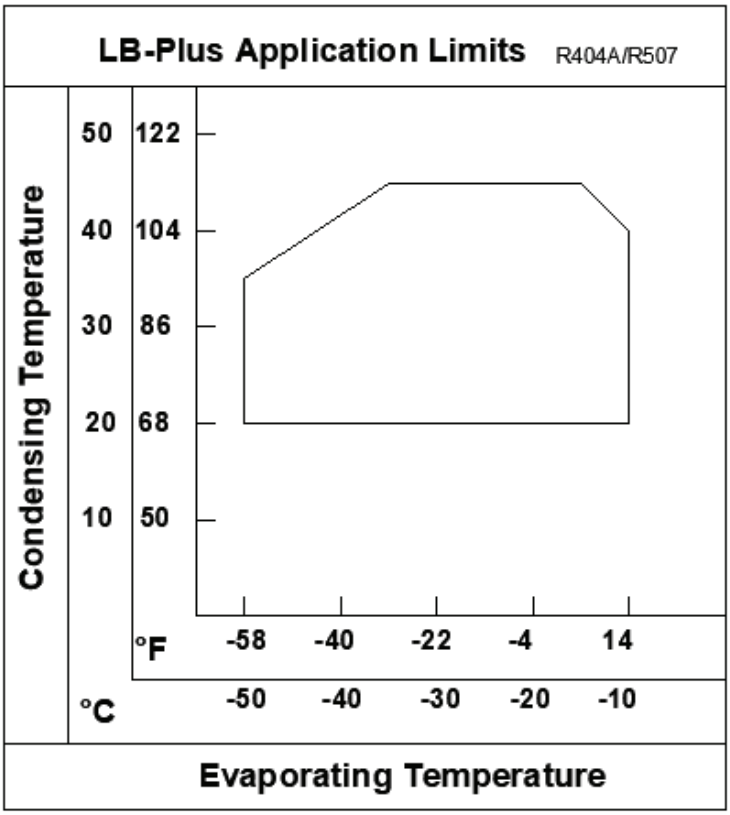

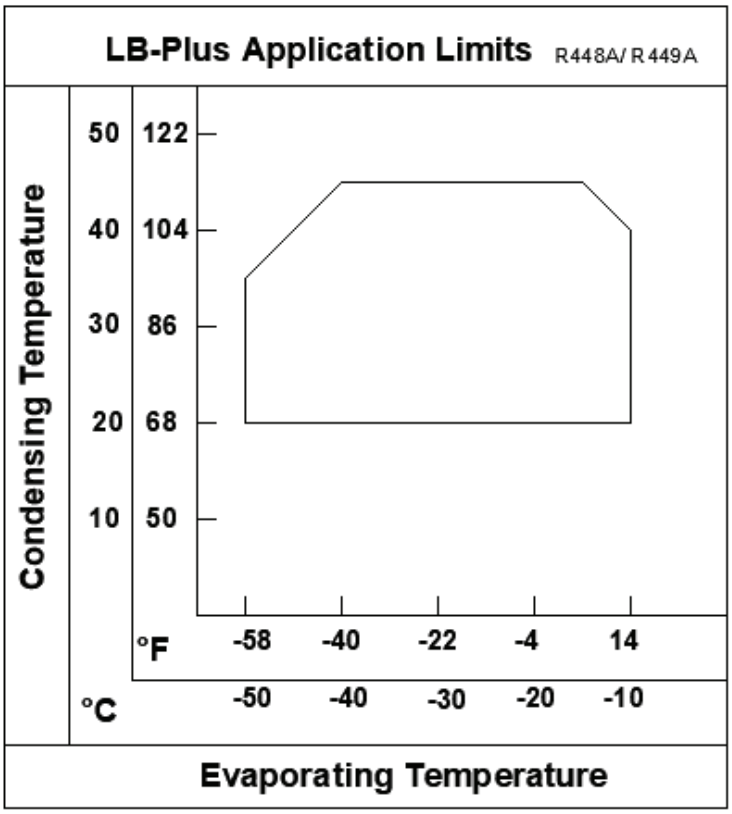

HANBELL

SHANGHAI HANBELL PRECISE MACHINERY CO., LTD
No.8289, Tingfeng RD, Fengjing Area, JinShan District, Shanghai
TEL:+86-21-57350280 FAX:+86-21-57352004
http://www.shahanbell.com.cn
E-mail:sales@shahanbell.com

HERMES VIET NAM MACHINERY COMPANY LTD
Block 28-30-32, 11 Street, Tan Duc Industrial Park, Commune, Duc Hoa District , Long An Province, Viet Nam.
TEL: +84-72-3769688 FAX: +84-72-3769690

HANBELL KOREA
555-93, Baekseok-dong, Seobuk-gu, Cheonan-si, Chungcheongnam-do, Korea
TEL:+82-41-562-5888 FAX:+82-41-562-5887
http://hanbell.co.kr
E-mail:sales1@hanbell.com

HANBELL PRECISE MACHINERY CO., LTD.
NO.5 Kongsan Road, Kuan-Yin Industrial Park, Kuan-Yin District, Tao-Yuan City, Taiwan, R.O.C.
TEL:+886-3-4836215
FAX:+886-3-4836223
http://www.hanbell.com
E-mail:sales1@hanbell.com

HANBELL EUROPE
Via dei Campazzi 25 / 27, 21040 Gerenzano (VA), Italia
TEL:+39-02-962-80188 FAX:+39-02-962-48011
http://www.comer-srl.com
E-mail:sales.it@comer-srl.com

HANBELL MIDDLE EAST
FZJOA220, Jabel Ali, Dubai, UAE
E-mail:sales1@hanbell.com

HBCE-LB-20-B(500)