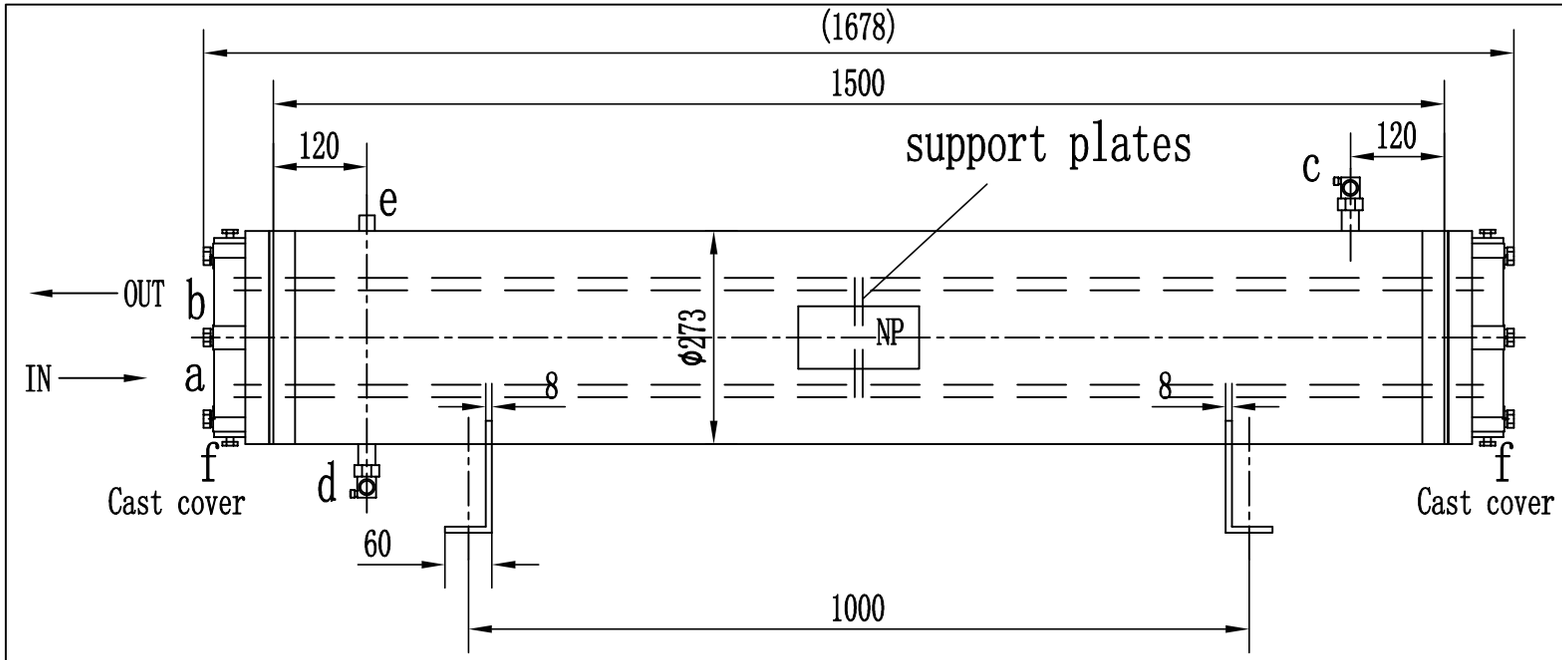

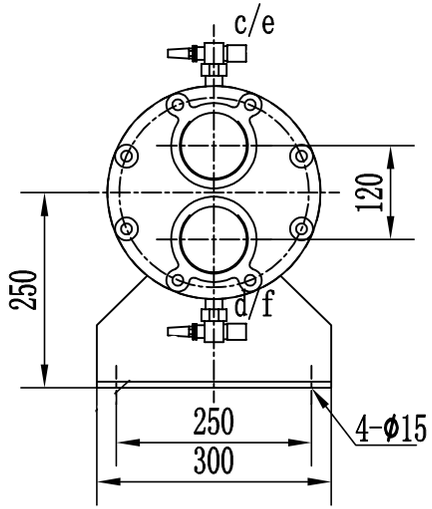

Product nameplate

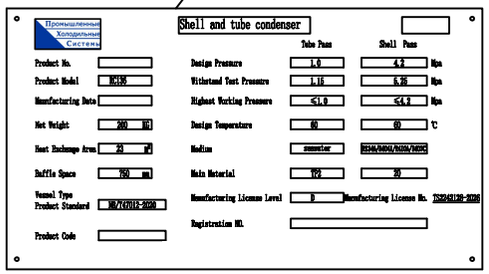

Color of shell and tube condenser: blue

Technical characteristics table	Design pressure(MPa)	Shell Pass	4.2	Tube Pass	1.0	Tube surface	a G2.5″ Internal thread	Use	seawater inlet
	Design temperature(℃)		60		60		b G2.5″ Internal thread		seawater outlet
	Medium		R134A/R404A/ R410A/R407C		seawater		c Φ1-5/8(ID)(rotate lock valve)		R134A/R404A/R410A/R407C entrance (Expand the inner mouth)
	Heat Exchange Area(M^2)	23					d Φ1-5/8(ID)(rotate lock valve)		R134A/R404A/R410A/R407C exit (Expand the inner mouth)
	Main weld coefficient	1.0					e NPT3/8		Vent port
	Corrosion margin	1.0					f1-2 RC1/4		Drainage outlet
	Vessel Type								
	weight								

Design			shell and tube condenser			
Check						Assembly drawings
						RC136